25. Steering System (Power Steering)

A: INSPECTION

1. STEERING WHEEL

1) Set the steering wheel in a straight-ahead position, and check the wheel spokes to make sure they are correctly set in their specified positions.
2) Lightly turn the steering wheel to the left and right to determine the point where front wheels start to move.
Measure the distance of the movement of steering wheel at the outer periphery of wheel.

Steering wheel free play
0 — 17 mm (0 — 0.67 in)

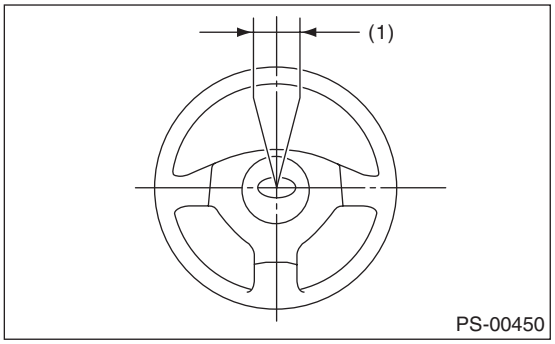

(1) Steering wheel free play

Move the steering wheel vertically toward the shaft to ascertain if there is play in the direction.

Maximum permissible play:
0.5 mm (0.020 in)

3) Drive the vehicle and check the following items during operation.
(1) Steering force:
The effort required for steering should be smooth and even at all points, and should not vary.
(2) Pulled to one side:
Steering wheel should not be pulled to either side while driving on a level surface.
(3) Wheel runout:
Steering wheel should not show any sign of runout.
(4) Return factor:
Steering wheel should return to its original position after it has been turned and then released.

2. STEERING SHAFT JOINT

When the steering wheel free play is excessive, disconnect the universal joint of steering shaft and check it for any play and yawing torque (at the point of the crossing direction). Also inspect for any damage to sealing or worn serrations. If the joint is loose, retighten the mounting bolts to the specified torque.

Tightening torque:
24 N·m (2.4 kgf-m, 17.4 ft-lb)

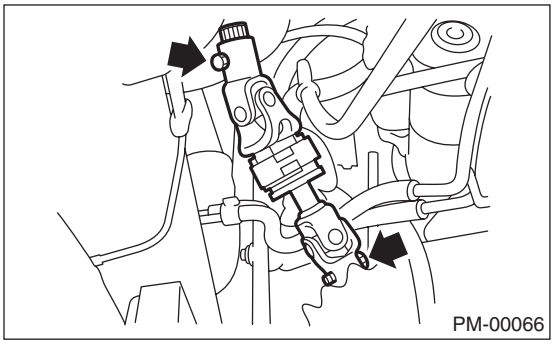

3. GEARBOX

Non-turbo model

1) With the vehicle placed on a level surface, turn the steering wheel 90° in both the left and right directions.
While the wheel is being rotated, reach under the vehicle and check for looseness in gearbox.

Tightening torque:
60 N·m (6.1 kgf-m, 44.3 ft-lb)

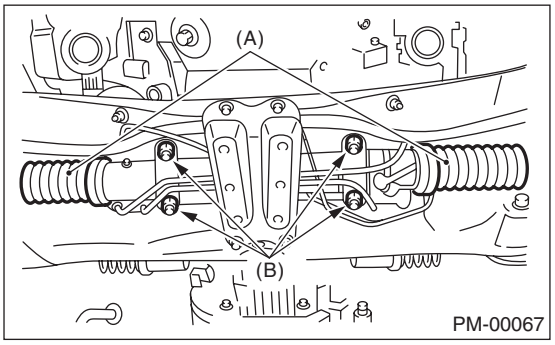

(A) Boot
(B) Gearbox mounting bolt

2) Check the boot for damage, cracks or deterioration.
3) With the vehicle placed on a level surface, quickly turn the steering wheel to the left and right.
While steering wheel is being rotated, check the gear backlash. If any noise is noticed, adjust the gear backlash in the following manner.
(1) Tighten the adjusting screw to 7.4 N·m (0.75 kgf-m, 5.4 ft-lb) and then loosen. Repeat this operation two times.

(2) Tighten the adjusting screw to 7.4 N·m (0.75 kgf-m, 5.4 ft-lb) and then loosen 25°.
(3) Apply liquid gasket to at least 1/3 of entire perimeter of adjusting screw thread.

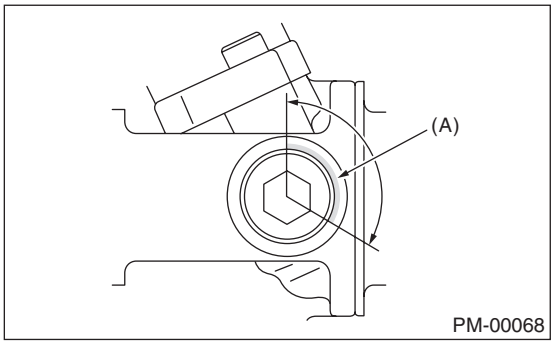

(A) Apply liquid gasket to at least 1/3 of entire perimeter.

(4) Install the lock nut. While holding the adjusting screw with a wrench, tighten the lock nut using ST.

ST 926230000 SPANNER

Tightening torque (lock nut):
40 N·m (4.1 kgf-m, 29.5 ft-lb)

Hold the adjusting screw with wrench to prevent it from turning while tightening the lock nut.

Turbo model & STI model

1) With the vehicle placed on a level surface, turn the steering wheel 90° in both the left and right directions.
While the wheel is being rotated, reach under the vehicle and check for looseness in gearbox.

Tightening torque:
60 N·m (6.1 kgf-m, 44.3 ft-lb)

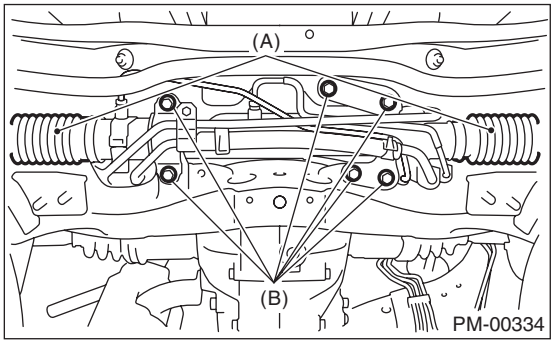

(A) Boot
(B) Gearbox mounting bolt

2) Check the boot for damage, cracks or deterioration.

3) With the vehicle placed on a level surface, quickly turn the steering wheel to the left and right.
While steering wheel is being rotated, check the gear backlash. If any noise is noticed, adjust the gear backlash in the following manner.
(1) Tighten the adjusting screw to 9.8 N·m (1.0 kgf-m, 7.2 ft-lb) and then loosen.
(2) Tighten the adjusting screw to 4.8 N·m (0.49 kgf-m, 3.5 ft-lb) and then loosen.
(3) Tighten the adjusting screw to 4.8 N·m (0.49 kgf-m, 3.5 ft-lb) and then loosen 37°.
(4) Apply liquid gasket to at least 1/3 of entire perimeter of adjusting screw thread.

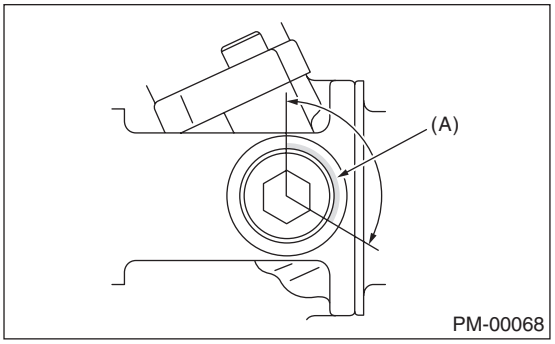

(A) Apply liquid gasket to at least 1/3 of entire perimeter.

(5) Install the lock nut. While holding the adjusting screw with a wrench, tighten the lock nut using ST.

ST 926230000 SPANNER

Tightening torque (lock nut):
40 N·m (4.1 kgf-m, 29.5 ft-lb)

Hold the adjusting screw with wrench to prevent it from turning while tightening the lock nut.

4. TIE-ROD

1) Check the tie-rod and tie-rod ends for bends, scratches or other damage.

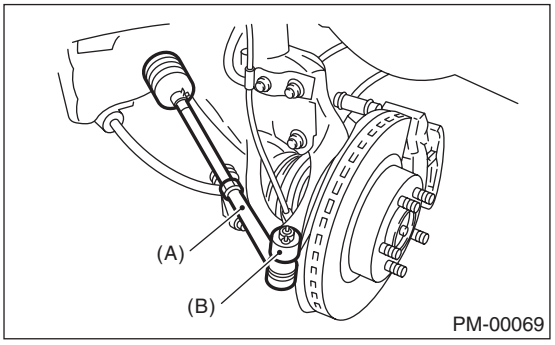

(A) Tie-rod end
(B) Knuckle arm

2) Check the connections of knuckle ball joints for play, inspect for damage on dust seals, and check free play of ball studs. If castle nut is loose, retighten it to the specified torque, then further tighten up to 60° until the cotter pin hole is aligned.

Tightening torque:
27 N·m (2.75 kgf-m, 19.9 ft-lb)

3) Check the lock nut on the tie-rod end for tightness. If it is loose, retighten it to the specified torque.

Tightening torque:
83 N·m (8.5 kgf-m, 61.5 ft-lb)

5. POWER STEERING FLUID LEVEL

NOTE:
- At power steering fluid temperature 20°C (68°F); read the fluid level on the "COLD" side.
- At power steering fluid temperature 80°C (176°F); read the fluid level on the "HOT" side.

1) Place the vehicle with engine "OFF" on a level surface.
2) Check the fluid level using the scale on the outside of the reservoir tank (A). If the level is below "MIN" (B), add fluid to bring it up to "MAX" (C).

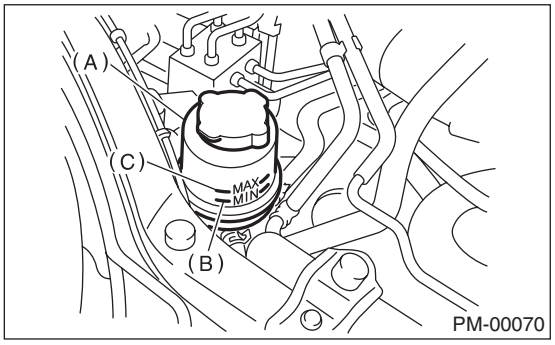

CAUTION:
If power steering fluid adheres to the exhaust pipe, wipe it off completely.

NOTE:
If fluid level is at MAX level or above, drain fluid to keep the level in the specified range of indicator by using a syringe or the like.

Recommended fluid:
Dextron III

Fluid capacity:
0.7 ℓ (0.7 US qt, 0.6 Imp qt)

6. POWER STEERING FLUID FOR LEAKS

Inspect the underside of oil pump and gearbox of power steering system, hoses, pipes and their couplings for fluid leaks.
If the fluid leaks are found, retighten their fitting bolts (or nuts) and/or replace their parts.

NOTE:
- Wipe the leaked fluid off after correcting fluid leaks.
- Also pay attention to clearances between hoses (or piping) and other parts when inspecting fluid leaks.

7. HOSES OF OIL PUMP FOR DAMAGES

Check the pressure hose and return hose of oil pump for crack, swell or damage. Replace the hose with a new part if necessary.

NOTE:
Prevent hoses from turning and/or bending when installing hoses.

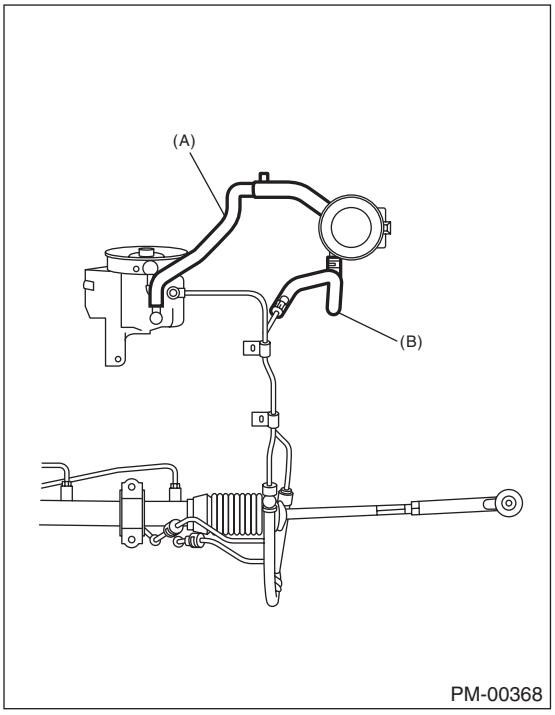

(A) Pressure hose
(B) Return hose

8. POWER STEERING PIPES FOR DAMAGES

Check the power steering pipes for corrosion and damage.
Replace the pipes with new parts if necessary.

9. GEARBOX BOOTS

Inspect both sides of the gearbox boot as follows, and correct the defects if necessary.
1) Positions (A) and (B) of the gearbox boot are fitted correspondingly in grooves (A) and (B) of the gearbox and rod (C).
2) Clips are fitted outside of positions (A) and (B) of boot.
3) Boot does not have crack or hole.

NOTE:
Rotate (B) position of gearbox boot against the torsion produced by the adjustment of toe-in etc. Apply grease to the groove (C).

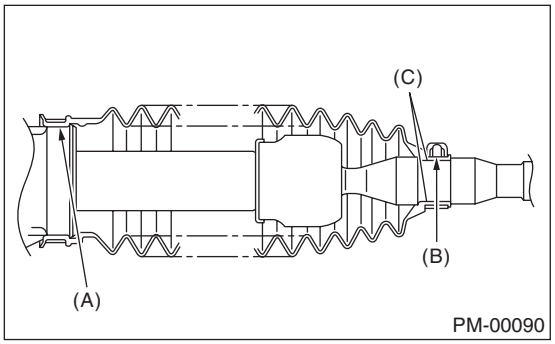

10.FITTING BOLTS AND NUTS

Inspect the fitting bolts and nuts of oil pump and bracket for looseness, and retighten them if necessary.
Inspect and/or retighten them when engine is cold.

ENGINE 1 SECTION

This service manual has been prepared to provide SUBARU service personnel with the necessary information and data for the correct maintenance and repair of SUBARU vehicles.
This manual includes the procedures for maintenance, disassembling, reassembling, inspection and adjustment of components and diagnostics for guidance of experienced mechanics.
Please peruse and utilize this manual fully to ensure complete repair work for satisfying our customers by keeping their vehicle in optimum condition. When replacement of parts during repair work is needed, be sure to use SUBARU genuine parts.

FUEL INJECTION (FUEL SYSTEMS)	FU(H4SO)
EMISSION CONTROL (AUX. EMISSION CONTROL DEVICES)	EC(H4SO)
INTAKE (INDUCTION)	IN(H4SO)
MECHANICAL	ME(H4SO)
EXHAUST	EX(H4SO)
COOLING	CO(H4SO)
LUBRICATION	LU(H4SO)
SPEED CONTROL SYSTEMS	SP(H4SO)
IGNITION	IG(H4SO)
STARTING/CHARGING SYSTEMS	SC(H4SO)
ENGINE (DIAGNOSTICS)	EN(H4SO)(diag)
GENERAL DESCRIPTION	GD(H4SO)

All information, illustration and specifications contained in this manual are based on the latest product information available at the time of publication approval.

FUJI HEAVY INDUSTRIES LTD.

G1920BE2

FUEL INJECTION (FUEL SYSTEMS)

FU(H4SO)

		Page
1.	General Description	2
2.	Throttle Body	12
3.	Intake Manifold	13
4.	Engine Coolant Temperature Sensor	22
5.	Crankshaft Position Sensor	23
6.	Camshaft Position Sensor	24
7.	Knock Sensor	25
8.	Throttle Position Sensor	26
9.	Manifold Absolute Pressure Sensor	27
10.	Mass Air Flow and Intake Air Temperature Sensor	28
11.	EGR Valve	29
12.	Fuel Injector	30
13.	Variable Valve Lift Diagnosis Oil Pressure Switch	34
14.	Oil Temperature Sensor	35
15.	Front Oxygen (A/F) Sensor	36
16.	Rear Oxygen Sensor	37
17.	Engine Control Module (ECM)	39
18.	Main Relay	40
19.	Fuel Pump Relay	41
20.	Electronic Throttle Control Relay	42
21.	Fuel	43
22.	Fuel Tank	44
23.	Fuel Filler Pipe	47
24.	Fuel Pump	51
25.	Fuel Level Sensor	53
26.	Fuel Sub Level Sensor	54
27.	Fuel Filter	55
28.	Fuel Cut Valve	56
29.	Fuel Damper Valve	57
30.	Fuel Delivery and Evaporation Lines	58
31.	Fuel System Trouble in General	61